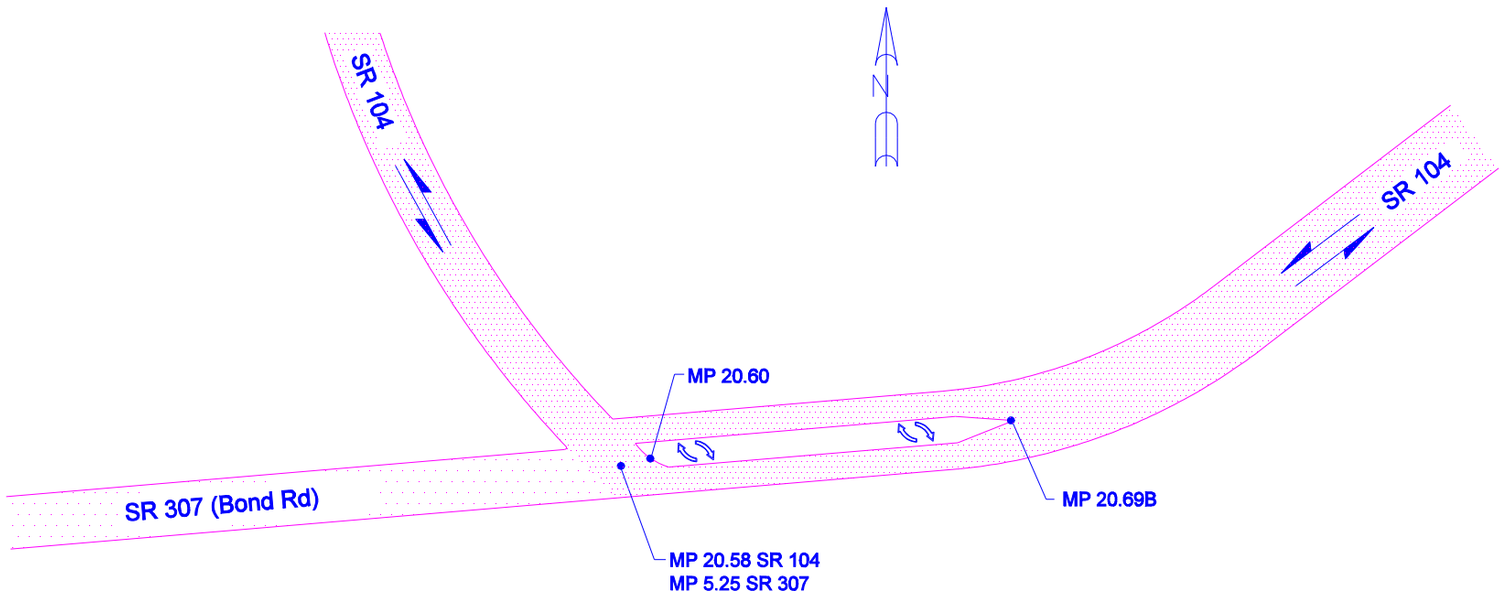

Not To Scale

8/20/2002	BTL	WSDOT OLYMPIC REGION	KITSAP COUNTY	JUNCTION SR 307	SR 104