Noise reduction measures for Tensa®Modular expansion joints

Presentation of options

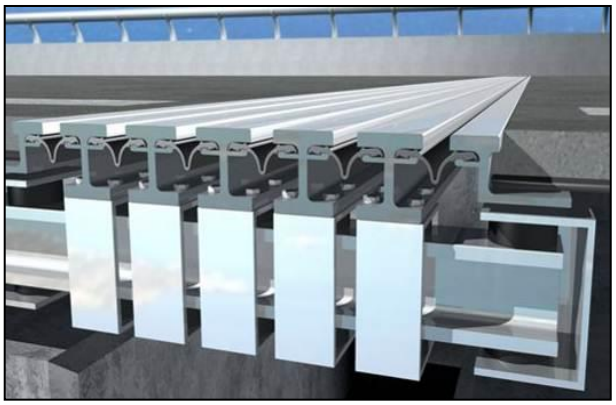

TABLE OF CONTENTS

1 Introduction 3

1.1 Noise emitted from joint's surface and transmitted above driving surface 3

1.2 Noise emitting from beneath the joint's surface 3

1.3 Factors affecting noise levels and their impact 4

2 The Tensa®Modular expansion joint 5

3 Reduction of surface noise by addition of sinus plates 7

3.1 Benefits and implications of use of sinus plates 8

3.2 Evidence of effectiveness of noise reduction by sinus plates: Testing 8

3.3 Evidence of effectiveness of noise reduction by sinus plates: Experience 9

4 Reduction of noise from beneath an expansion joint by *Robo®Mute* 10

5 Conclusions 12

APPENDIX 1 14

APPENDIX 2 21

1 Introduction

The Tensa®Modular expansion joint has a great deal to offer constructors and owners of bridges of all sizes, where movements of over 100 mm arise. Most notably, it offers exceptional flexibility, and the ability to accommodate very large movements. However, in certain circumstances, noise generated by traffic in crossing a modular joint can be bothersome (in particular, for people living close by), so measures to reduce such noise have been developed. These measures offered by mageba in relation to the Tensa®Modular expansion joint are described below, with evidence of their effectiveness in reducing noise.

1.1 Noise emitted from joint's surface and transmitted above driving surface

The ability of a modular joint to accommodate very large longitudinal movements, and its flexibility, result from the arrangement of the individual beams which form its driving surface. These *lamella beams* (also known as *centerbeams*) divide the movement gap at the end of a bridge's deck into a series of small, easily traversable gaps. Despite the many advantages of this design, it has the drawback that the arrangement of the surface beams results in a series of mini-impacts as a vehicle's wheels cross the joint, which generates sound.

If such sound has the potential to be bothersome in certain circumstances, it can be addressed by the addition of surface plates, which bridge over the gap's individual gaps to create a smooth driving surface. The surface plates offered by mageba, known as "sinus plates" due to their shape which resembles a sine wave, are shown in Figure 1 and described in Section 3 below.

Fig. 1. A modular joint with sinus plates on its surface

Fig. 2. Robo®Mute noise protection beneath an expansion joint – creating enclosed space

1.2 Noise emitting from beneath the joint's surface

As a vehicle crosses an expansion joint, noise from the vehicle and its contact with the joint passes right through the joint and is transmitted from the space beneath the joint – most significantly, transversely to the direction of travel, but due to reflection of sound waves, any downward or horizontal emission of noise from this space can have a considerable impact.

Such noise can be addressed by placing specially developed mats hanging beneath the joint, enclosing the space below the joint. These mats block the free passage of sound waves away from this space, absorbing much of the noise energy and reducing its intensity.

The solution offered by mageba, known as *Robo®Mute*, is shown in Figure 2 and described in Section 4 below.

1.3 Factors affecting noise levels and their impact

A large number of factors affect the sound generated by traffic crossing any bridge expansion joint and the impact this noise will have – for example:

- The type, design and quality of the expansion joint; noise can be minimised by selection of a high-quality joint, with a design which minimises impacts between its components and damps vibrations (see Figure 3), and which is fabricated to a high degree of precision.
- The care with which the expansion joint is installed; proper long-term joint performance requires installation without unintended stresses and constraint forces which could result in accelerated wear and impacts between components. A joint with a rectilinear layout, such as the Tensa®Modular joint with its single support bar design (see Figure 4), simplifies installation and thus minimises the risk of imprecision.
- The care with which the road surface at each side of the joint is placed, and its condition; quietness under traffic requires smooth transitions (carriageway – joint – carriageway) as a vehicle traverses the joint. A lack of smoothness (e.g. due to steps or rutting) can result in impacts and vibrations, within the joint and in the vehicle, which can generate noise. Such noise can be significant, for example, when resulting from impacts on an empty truck which could resonate strongly and cause a “boom” sound.
- Varying surfacing at either side of a joint (e.g. asphalt at one side and concrete at the other); this can accentuate the change in sound that occurs as a vehicle crosses the joint, heightening disturbance levels.
- The condition of the expansion joint, which depends on the age of the joint, and the care and attention which is devoted to inspection and maintenance activities through its life.
- The presence of relatively loose features such as cover plates - horizontal ones for pedestrians or cyclists, or vertical ones to form an expansion joint in the traffic barrier at the side of the bridge.
- The type of bridge structure and its design (in particular, the design of the space in the abutment underneath the joint, and how this space is already separated from the exterior) - e.g. a design which blocks the path of noise will greatly reduce the nuisance caused by such noise.
- The materials from which the bridge is constructed - e.g. a hollow steel structure will echo and resonate, whereas a solid concrete structure will damp noise.
- The proximity of residential buildings and other places where people will be likely to spend time, and the location of these relative to the bridge and expansion joint - is there a clear straight line for noise to travel?
- The topography of the area – are nearby buildings situated below the level of the bridge deck or above it?
- Level of background noise – since sensitivity to noise is strongly influenced by this.
- Time of day - since noise at night is likely to be far more bothersome than daytime noise.
- Personality and state of mind of the person who hears the noise and might object – since objective data should be valued more than a subjective alternative.

All such factors should be considered when assessing a perceived problem with noise at any particular expansion joint and developing a solution to such a problem.

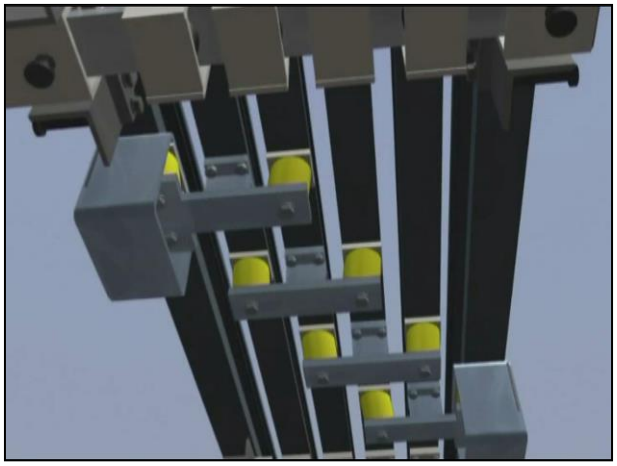

Fig. 3. The elastic design of the Tensa®Modular expansion joint provides damping and prevents impacts between its structural elements – resulting in a quieter joint

Fig. 4. The rectilinear, regular layout of the Tensa®Modular expansion joint simplifies installation, minimising the risk of noise due to sub-optimal installation

2 The Tensa®Modular expansion joint

Expansion joints must bridge the gaps between the deck of a bridge and its abutments, or between sections of deck, while facilitating movements due to influences such as settlement, temperature variations, traffic, creep and shrinking deformations of the deck. In bridging the gaps, the expansion joints permit traffic to cross the structure comfortably and safely.

Modular expansion joints fulfil these needs by dividing the gap into a number of smaller gaps, separated by steel centerbeams. These individual gaps are spanned by rubber seals which make the joint watertight. The centerbeams are supported by support bars, which span the bridge gap. A control system spreads the overall movement of the joint among its individual gaps, ensuring that no single gap will be too large for traffic to negotiate.

The Tensa®Modular expansion joint (also designated by mageba as type LR) is a highly developed version of this type of joint, having been continuously developed since invented by mageba over four decades ago. The current design is the 4th generation in the development series, which originated as a multiple support bar system (with individual support bars required for each centerbeam, a system still used by some manufacturers today), and developed into the single support bar system of today (see Figures 4 and 5).

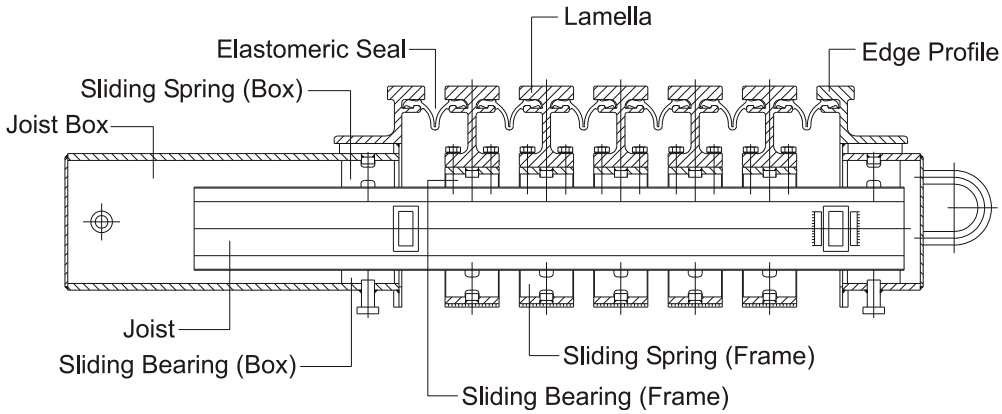

Fig. 5. A Tensa®Modular expansion joint – Section at a support bar

The design of the Tensa®Modular joint is particularly flexible, enabling it to facilitate movements in every direction and rotations about every direction – a degree of flexibility which cannot be matched by other modular joint types.

The design also allows the joint to accommodate exceptionally large longitudinal movements of the bridge deck. Appendix 3 contains details of 19 bridges for which Tensa®Modular joints with 15 gaps or more have been supplied since 1994, along with reference letters for the largest of these.

The Tensa®Modular joint has proven its quality, not only by its widespread use in bridges, large and small, all around the world for many years, but also in extensive and demanding laboratory testing. A selection of these tests is also presented in Appendix 1.

The design and functioning of the Tensa®Modular expansion joint, and a number of its features (including the noise-reducing sinus plates) are illustrated in a short video which can be downloaded from the *Quick Link* section at www.mageba.ch, or from www.youtube.com/magebagroup.

A very large Tensa®Modular joint, installed on a bridge, is shown in Figure 6.

Fig. 6. A Tensa®Modular expansion joint – as installed and under traffic

The Tensa®Modular expansion joint can be designed to suit the requirements of almost any bridge, assuming that connection possibilities exist. In addition to the exceptional flexibility and great longitudinal movements it can accommodate (as mentioned above), it can also be designed for large skew movements (with the movement of the joint not perpendicular to the centerbeams), and to match the surface profile of any structure, with horizontal and vertical bends (such as shown in Figure 7, creating a kerb for a footway). The joint can also be equipped with sliding cover plates if required, e.g. for pedestrian traffic (see Figure 8).

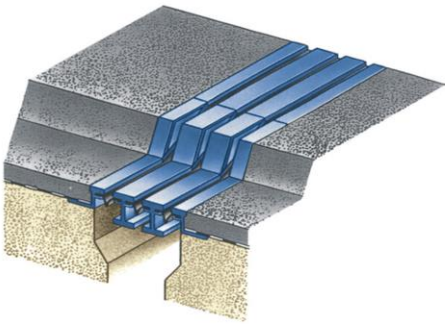

Fig. 7. Profiling of surface of joint to suit shape of deck

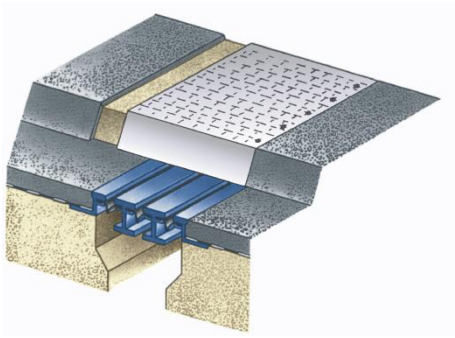

Fig. 8. Fitting with cover plates as required, e.g. for pedestrian traffic

3 Reduction of surface noise by addition of sinus plates

Modular expansion joints offer many advantages, such as their exceptional flexibility, which enables them to accommodate movements in every direction and rotations about every axis, and their ability to accommodate very large longitudinal movements. However, quietness under traffic is not among the advantages this type of joint can claim to offer – unless, that is, it is fitted with noise-reducing surface plates. The Tensa®Modular expansion joint can be fitted with “sinus plates” on its surface (so-called for their sine wave shape), as shown in Figures 9 and 10. The sinus plates partially cover the gaps between centerbeams / edgebeams, providing continuous support to the wheels of passing vehicles and preventing the impacts which result in noise when vehicle wheels strike the straight, transverse edges of the beams of a modular joint without the plates. The resulting vibrations in the tyres produce a “drrrrt” sound, typically with a frequency of approximately 1 kHz, which can travel for several kilometres.

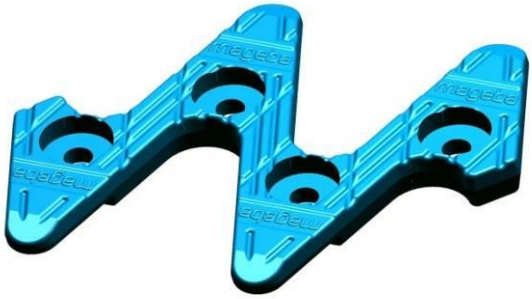

Fig. 9. A sinus plate, with four bolt holes for connection to a centerbeam

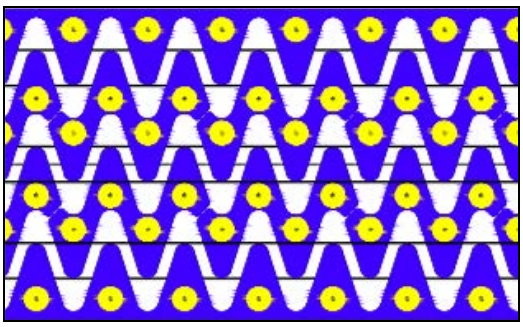

Fig. 10. Drawing of plan view of a three-gap modular joint with sinus plates

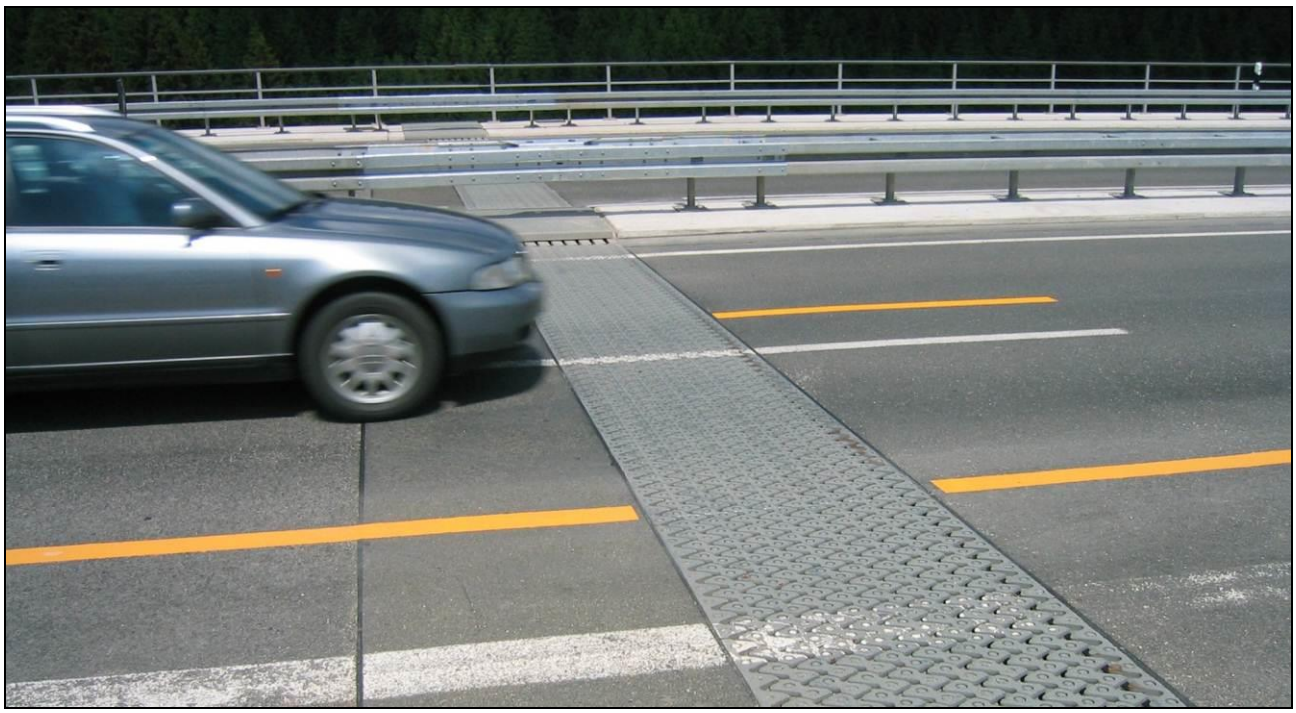

Fig. 11. A 9-gap Tensa®Modular expansion joint with noise-reducing “sinus plates”

3.1 Benefits and implications of use of sinus plates

The use of sinus plates on a Tensa®Modular expansion joint offers several benefits, but introduces some limitations to movement of the joint, which must be considered before specifying their use. The following points in particular should be noted:

- The use of sinus plates greatly reduces noise under traffic.
- Their use also increases driver comfort, and reduces vibrations on the joint and on vehicles, reducing fatigue loading.
- In contrast to finger joints, the sine wave shape of the plates leaves no longitudinal gap in the direction of traffic flow, avoiding hazards for cyclists.
- The sinus plates are fixed by specially coated pre-stressed high strength bolts. Compared with welded connections, this allows far easier removal, for replacement of plates or of the rubber seals beneath.
- Because the sinus plates partially bridge the gaps between beams, the movement per gap can be increased. Typically, where individual maximum gaps, or movements per gap, of 80 mm are allowed for a joint without sinus plates, the figure can be increased to 100 mm if sinus plates are used. This may mean, for example, that a 4-gap joint with sinus plates can accommodate the same longitudinal movement (4 x 100 mm) as a 5-gap joint without sinus plates (5 x 80 mm) – offering some cost savings.
- However, the use of sinus plates limits the ability of the joint to accommodate transverse and vertical movements, because the sinus plates may collide with each other (during transverse movements) or with adjacent centerbeams / edgebeams (during vertical movements).

3.2 Evidence of effectiveness of noise reduction by sinus plates: Testing

Two principle issues might be considered when evaluating the effectiveness of a solution such as surface plates in combatting noise from an expansion joint:

1. The degree to which noise from the joint is reduced, in dB, compared to a joint that does not feature the solution; or
2. The degree to which noise from a joint, which features the solution, exceeds the level of “background noise” which pertains on the road in the vicinity of (but not directly at) the joint.

It can be strongly argued that the second of these approaches is considerably more relevant in most cases, because the disturbance level caused by any source of noise depends very strongly on how it stands out from other noises to which the listener has become accustomed. A listener is unlikely to care how much quieter the joint is than it would have been if it did not feature a particular solution – which is, in effect, what is evaluated by the first approach. The first approach also has the flaw that it does not take account of the fact that all modular joints, without any noise reducing features, do not emit the same level of noise under traffic. Therefore, although a noise reduction solution may reduce noise significantly, and thus satisfy a requirement based on this approach, the resulting noise level may still be unacceptably high.

A combination of the above two approaches can also be considered, with an evaluation of:

3. The degree to which the addition of sinus plates to a joint reduces the amount by which noise from the joint exceeds the level of background noise from the road

The effectiveness of sinus plates in combatting noise is considered for each of the above approaches, in a separate report entitled “Noise reduction measures for Tensa®Modular expansion joints - Presentation of options and evaluation of effectiveness”, the cover sheet of which is shown in Appendix 2.

The report shows how data from reports by one of Europe's leading specialists in this area, Müller-BBM GmbH, can be used to demonstrate effectiveness as follows:

- The addition of surface plates to a test joint, modified in the field to simulate different conditions, reduced noise by between 3 and 14 dB, depending on vehicle type and speed. Greater reductions could be expected for an expansion joint with full factory quality and road surfacing laid for a long-term service life. However, this approach to the evaluation of effectiveness does not consider the background noise which is so critical to the impact of the noise, or the base noise level of the joint without surface plates, and is thus of limited value.
- The level of noise from a Tensa®Modular expansion joint featuring noise-reducing sinus plates was, on average, just 2.6 dB higher than the level at the road surface 30m away for car traffic, or just 1.15 dB for heavier truck traffic. This demonstrates effectiveness in a way which is relevant to the people who would be disturbed by expansion joint noise.
- The net increase in noise above background noise levels from the road, caused by the presence of a joint with sinus plates, was found to be just 28% of the increase caused by a joint without sinus plates for car traffic, or just 22% for heavier truck traffic.

3.3 Evidence of effectiveness of noise reduction by sinus plates: Experience

Since noise levels are so subjective and dependent on many factors such as bridge design and materials, topology, distance to those who would be disturbed by noise and their sensitivity to noise, perhaps the best indication of the benefit of using surface plates can be got by listening to them in action: A video at

www.youtube.com/magebagroup

(direct: www.youtube.com/watch?v=REO54xvSlts&list=UUNSUc53sHueRF-sKimvlLFg&index=1)

shows traffic crossing a 7-gap mageba modular joint *without* surface plates, and on the other carriageway behind, an identical 7-gap joint *with* surface plates. This video is likely to give many engineers all the confidence they need in the ability of surface plates to achieve the noise reduction they require.

Further evidence is provided by the fact that modular joints with such surface plates continue to be widely used in countries like Germany that already have much experience of them, which can only reflect satisfaction with their performance – not only in reducing noise, but also with respect to durability and strength.

4 Reduction of noise from beneath an expansion joint by *Robo®Mute*

As described in Section 1.2 above, when a vehicle passes over an expansion joint, vibrations from the vehicle and its contact with the joint result in noise which passes through the joint and is transmitted from the space beneath the joint. This noise has a lower frequency than the noise from the surface of the joint, and travels much shorter distances. Depending on the design and geometry of the structure, this noise can generally escape in various directions, potentially becoming a source of considerable bother for local residents and others who might hear it - unless measures are implemented to prevent the noise from escaping from this space.

mageba's solution to this problem is known as Robo®Mute, which consists of specially developed mats hanging beneath the joint, enclosing the space below the joint (see Figures 12 to 17). These mats block the free passage of airborne sound waves away from this space, absorbing much of the noise energy and reducing its intensity. It primarily consists of a longitudinal noise-reducing membrane under the full length of the joint, hanging from one side of the bridge gap to the other, and a vertical noise-reducing end barrier at each end of the joint. Rock wool ropes are placed within the longitudinal membrane to absorb the noise, reducing its intensity before it escapes. The longitudinal membrane beneath the joint can be easily disconnected at one side of the bridge gap, allowing it to hang vertically from the other side and permitting access to the underside of the expansion joint for inspections etc.

Fig. 12. View of enclosed space beneath an expansion joint with Robo®Mute noise protection (above longitudinal noise-reducing membrane)

Fig. 13. View of area beneath an expansion joint with Robo®Mute noise protection (below longitudinal noise-reducing membrane)

This solution can be used under any type of expansion joint. The longitudinal membrane is made from a rubber-like EVA plastic with mineral filler. It is strong, durable and tear-resistant, and highly resistant to fire, petrol, diesel, salt-water, mould, UV light and ozone. It remains functional on a long-term basis, even under unfavourable climatic conditions. The material offers high resistance to both low and high temperatures, without deformation. The flexible system design makes it easily adaptable to local requirements, and the flexibility of the material ensures a precise fitting to the structure, independent of the expansion joint above.

Fig. 14. Installed vertical noise-reducing end barrier of Robo®Mute noise protection system

Fig. 15. Sample of vertical noise-reducing end barrier of Robo®Mute noise protection system

Fig. 16. View of space beneath a joint with Robo®Mute noise protection, with longitudinal membrane disconnected at one side and hanging loose to allow inspection of joint

Fig. 17. View of connection of longitudinal noise-reducing membrane at one side of bridge gap using wing nuts, allowing easy disconnection during inspection of joint

The effectiveness of Robo®Mute in combatting noise is considered in the previously mentioned separate report entitled “Noise reduction measures for Tensa®Modular expansion joints - Presentation of options and evaluation of effectiveness”, the cover sheet of which is shown in Appendix 2. The report concludes that noise measured directly beneath the joint during testing was reduced by 12 – 13 dB as a result of the use of Robo®Mute.

5 Conclusions

Tensa®Modular expansion joints offer many benefits to bridge constructors and owners, and advantages over other types of joint in various circumstances, but may require special features to reduce the noise generated by crossing traffic. The need for such features depends on many factors, including proximity of residential areas, the type and design of the main structure, and the level of background noise (Section 1.3).

If noise from a modular joint is to be reduced, it must be determined whether it is necessary to reduce noise emanating from the joint's surface (above the level of the driving surface), or from beneath the joint (within the abutment). Each type has its own characteristics, and must be tackled in its own way.

Noise from the surface of a modular joint can be significantly reduced by the addition of sinus plates to the joint's surface (Section 3). These plates bridge the individual gaps between the joint's lamella beams, providing a continuous, flat surface and preventing wheel impacts as a vehicle crosses the joint. This greatly reduces noise, as can be seen by comparing the noise levels at two identical joints, one with sinus plates and one without; a link to a video showing traffic at two such joints is provided in Section 3.3. A separate report (refer to Appendix 2) demonstrates effectiveness of the noise reduction feature as follows:

- The addition of surface plates to a test joint, modified in the field to simulate different conditions, reduced noise by between 3 and 14 dB, depending on vehicle type and speed. Greater reductions could be expected for an expansion joint with full factory quality and road surfacing laid for a long-term service life. However, this approach to the evaluation of effectiveness does not consider the background noise which is so critical to the impact of the noise, or the base noise level of the joint without surface plates, and is thus of limited value.
- The level of noise from a Tensa®Modular expansion joint featuring noise-reducing sinus plates was, on average, just 2.6 dB higher than the level at the road surface 30m away for car traffic, or just 1.15 dB for heavier truck traffic. This demonstrates effectiveness in a way which is relevant to the people who would be disturbed by expansion joint noise.
- The net increase in noise above background noise levels from the road, caused by the presence of a joint with sinus plates, was found to be just 28% of the increase caused by a joint without sinus plates for car traffic, or just 22% for heavier truck traffic.

Noise from beneath a modular joint can be significantly reduced by the use of *Robo®Mute* membranes beneath the joint (Section 4). The membranes, which enclose the space beneath the expansion joint, reflecting and damping the noise, were found in testing to reduce noise levels beneath the joint by 12 to 13 dB.

Considering the many factors which influence the level of noise generated by traffic crossing an expansion joint and how this noise will impact on those who would hear it, and considering also the very different solutions required to reduce noise depending on whether it emanates from the joint's surface (above surface level) or from beneath the joint, it is clearly very important to properly understand the nature and significance of any perceived problem before seeking to address it. The following questions should be asked:

- Is it really necessary to take action? Does a problem exist which can be resolved by such action?
- Can the quietness of a *proposed* joint be enhanced by selecting a joint with an elastic, damping design and by ensuring the quality of its fabrication and installation?

- Can the quietness of an *existing* joint be enhanced by inspection and maintenance, and repair if necessary? Can noise be reduced by improving the carriageway surface at each side of the joint (and perhaps strengthening it with mageba *Robo®Dur* strengthening ribs)?
- What purpose should the measure fulfil? E.g. is it more important that the joint is a certain amount quieter than a joint which does not feature noise reduction, or that the joint is not much louder than the “background noise” from traffic on the road at either side of the joint?
- Is there a need to tackle noise from above or below the joint, or both?

If such issues are considered, and the solutions that are available to address them are known, an optimal solution to noise at any modular expansion joint can be developed.

APPENDIX 1

Evidence of performance and durability of

Tensa®Modular expansion joints

– Selected reference projects and tests –

Evidence of performance and durability of Tensa®Modular expansion joints

- Selected reference projects and tests -

The Tensa®Modular joint has proven its quality and durability through its widespread use in bridges, large and small, all around the world for many years.

A selection of 19 bridges, for which Tensa®Modular joints with 15 gaps or more have been supplied since 1994, is presented below. The joint set world records already in 1995 with the 25-gap, 2,000mm movement joints of the Tsing Ma Bridge in Hong Kong, and again in 2003 with the 27-gap, 2,160mm movement joints of the Run Yang Yangtze River Bridge in China. The joints of both bridges have performed excellently to date, as confirmed by reference letters, also copied below.

The joint has also proven its performance and durability in extensive and demanding laboratory testing. A selection of these tests is presented in Figures A1 to A4.

Overview of very large modular expansion joints (min. 15 gaps) supplied by mageba since 1994

TENSA®MODULAR expansion joints

		Bridge information					Expansion joint information						
Project Name	Location	Type of bridge	Total length [m]	Longest span [m]	Material of deck	Year of completion	Year of joint installation	Largest type of joint in use	Movement capacity [mm]	Total length of all joints [m]	Sliding elements with high grade sliding material (RoboSlide)*	Anti-skid coating (RoboGrip) applied	Remote Monitoring (RoboControl)
Run Yang - Nan Cha Bridge	China	Suspension bridge	2,132	1,490	Steel	2004	2003	LR27	2,160	65.0	Yes	Yes	No
Tsing Ma Bridge	China (HK)	Double Decker Suspension bridge	2,200	1,377	Steel	1997	1996	LR25	2,000	58.7	No	Yes	No
Incheon Grand Bridge	South Korea	Cable-stayed bridge	12,300	800	Steel	2009	2008	LR24	2,000	62.2	Yes	(Yes)	Yes
Chong Ming Bridge	China	Suspension bridge	9,500	730	Steel	2009	2008	LR22	1,760	68.6	Yes	Yes	No
Ba Lin He Bridge	China	Suspension bridge	1,564	1,088	Steel	2009	2008	LR21	1,680	48.9	Yes	Yes	No
2nd Nanjing Bridge	China	Cable-stayed bridge	2,960	628	Steel	2001	2000	LR20	1,600	67.0	No	Yes	No
4th Nanjing Bridge	China	Suspension bridge	2,476	1,418	Steel	2012	2012	LR19	1,520	62.0	Yes	Yes	No
Pont Canal de Beauharnois	Canada	Girder bridge	2,550	60	Concrete	2012	2012	LR19	1,520	360.0	Yes	No	No
Taizhou Bridge	China	Suspension bridge	2,940	1,080 x 2	Steel	2011	2011	LR18	1,440	62.4	Yes	Yes	Yes
Machang Bay Bridge	South Korea	Cable-stayed bridge	1,700	400	Steel	2007	2007	LR18	1,440	42.0	Yes	No	No
An Qing Bridge	China	Cable-stayed bridge	1,040	510	Steel	2004	2003	LR18	1,440	52.8	Yes	Yes	No
Aizhai Bridge	China	Suspension bridge	1,074	1,146	Steel	2012	2012	LR17	1,360	48.0	Yes	No	No
Golden Ears Bridge	Canada	Cable-stayed bridge	1,280	320	Composite	2009	2009	LR17 with *Fuse-Box*	2,235 **	211.0	Yes	No	No
Lillebaelt Bridge	Denmark	Suspension bridge	1,700	600	Steel	2003	2003	LR16	1,280	53.2	Yes	No	No
Ting Kau Bridge	China (HK)	Cable-stayed bridge	1,177	475	Steel	1998	1998	LR16	1,280	61.0	No	Yes	No
Yongjiang Bridge	China	Cable-stayed bridge	908	464	Steel	2011	2011	LR15	1,200	81.2	Yes	Yes	No
Geoga Bridge	South Korea	Cable-stayed bridge	3,501	475	Steel	2009	2008	LR15	1,200	82.0	Yes	No	No
Kwang Ahn Bridge	South Korea	Suspension bridge	900	500	Steel	2002	2002	LR15	1,200	12.0	No	No	No
Storebaelt West Bridge	Denmark	Cantilever bridge	6,611	110	Concrete	1994	1994	LR15	1,200	174.0	No	No	No

*) used for large modular expansion joints since 2003. **) A modular joint featuring *Fuse-Box* can facilitate large movements during an earthquake without major damage. This seismic movement capacity, which is bigger than the service movement of 80mm per gap, is given

2nd Nanjing Bridge

4th Nanjing Bridge

Pont Canal de Beauharnois

Taizhou Bridge

Machang Bay Bridge

An Qing Bridge

Aizhai Bridge

Golden Ears Bridge

Lillebaelt Bridge

Ting Kau Bridge

Yongjiang Bridge

Geoga Bridge

Kwang Ahn Bridge

Storebaelt West Bridge

Run Yang Bridge, China - 27 gaps

Tsing Ma Bridge, Hong Kong - 25 gaps

Incheon Bridge, South Korea - 24 gaps

Chong Ming Bridge, China - 22 gaps

Ba Lin He Bridge, China - 21 gaps

用户意见

Reference Letter

润扬长江公路大桥使用了由瑞士玛格巴公司生产的 LR27（最大伸缩量 2160mm）及 LR10（最大伸缩量 800mm）模数式桥梁伸缩装置，该伸缩装置自 2005 年安装使用至今，伸缩自如，伸缩间隙均等，密水性功能好，车辆通行舒适，满足桥梁的伸缩需求。

LR27(biggest movement of 2160mm) and LR10(biggest movement of 800mm) modular expansion joints manufactured by Mageba SA have been installed on RunYang Yangze River Road Bridge. Since the installation in 2005, they have been meeting the moving requirements of the bridge with its perfect movements, equal gaps, good sealing function and comfortable passage of the vehicles.

该公司在中国的全资子公司-玛格巴（上海）桥梁构件有限公司定期对产品的使用养护进行现场观测，并提供建议，售后服务措施良好。

Mageba (Shanghai) Bridge Products Co.,Ltd, its wholly-invested daughter company in China, has been regularly tesing on-site and giving suggestions to assure the usage and maintenance of the products. The after-sales service is very good.

希望玛格巴集团公司继续将最好的产品和完善的售后服务措施提供给中国客户，为中国的公路桥梁建设再做贡献。

We hope Mageba Group will continue to provide the best products and perfect after-sales service to the Chinese clients so as to make further contributions to the construction of China's roads and bridges.

江苏润扬大桥发展有限责任公司

二零零九年九月

JiangSu RunYang Bridge Development Limited Liability Company

September 2009

TRANSPORT INFRASTRUCTURE MANAGEMENT LIMITED
交通基建管理有限公司

Tsing Ma Control Area
青馬管制區

Our Ref: TM11/AC/0.0/HB/31046/L

07 November 2011

To Whom It May Concern

Dear Sir

Contract No TD51/2006
Tsing Ma Control Area MOM Contract
Tsing Ma Bridge and Ting Kau Bridge
Mageba Modular Expansion Joints – Performance of the Control Springs

Transport Infrastructure Management Limited (TIML) have been responsible for managing, operating and maintaining the Tsing Ma Control Area (TMCA) in Hong Kong since 1997.

The Tsing Ma Bridge and Ting Kau Bridge form part of the TMCA. Tsing Ma Bridge is a double deck road and rail suspension bridge with a main span of 1,377m. Ting Kau Bridge is a 1,177m long cable stayed bridge.

Mageba SA supplied modular expansion joints for both bridges in-the 1990's; 6 number LR25 type joints (with 25 gaps) for Tsing Ma Bridge and 5 number LR14 and LR16 type joints (with 14 and 16 gaps) for Ting Kau Bridge.

After the bridges opened to traffic in 1997 (Tsing Ma Bridge) and 1999 (Ting Kau Bridge) the joints have in general performed very well. During the first few years of operation a few of the control springs on the movable sides of the expansion joints exhibited signs of wear due to the high frequency and magnitude of the opening and closing movements of the bridges. At the time, five springs were replaced with Mageba's newly developed 4th generation spring.

Since then TIML have continued to replace worn springs with the 4th generation of spring on a need by need basis. We can confirm that the improved design of the new generation of spring has significantly extended the service life of the control system. Based on our experience to date, we have been very satisfied with the performance in service of the new springs.

Yours faithfully
TRANSPORT INFRASTRUCTURE MANAGEMENT LIMITED

James D Gibson
Highway Maintenance Manager

JDG/AC/hw

ISO 9001 : 2008 Certificate No : Q154 ISO 14001 : 2004 Certificate No : E053 OHSAS 18001 : 2007 Certificate No : S021

The Administration Building, North West Tsing Yi Interchange, Tsing Yi, N.T., Hong Kong
香港新界青衣西北交匯處行政大樓 ☎ (852) 2436 5302 ☏ (852) 2489 8900 ✉ info@tsingma.com.hk

Figure A1: **Opening Movement & Vibration (OMV) Test** on an 11-gap joint with “sinus plates”. This test simulates the daily opening movements, and vibrations from traffic, of a 75-year life - but the joint passed an extended test that simulated a 100-year life

Figure A2: **Seal Push Out (SPO) Test**, carried out following completion of the OMV test, verified the reliability of the rubber sealing profiles and confirmed watertightness even after many years of service

Figure A3: **Seismic test** according to Caltrans specifications, at Lehigh University, Pennsylvania. This testing on a 7-gap joint, allowing 29” longitudinal and +/- 16” transverse movements at speeds of 43”/s, resulted in no damage to the joint

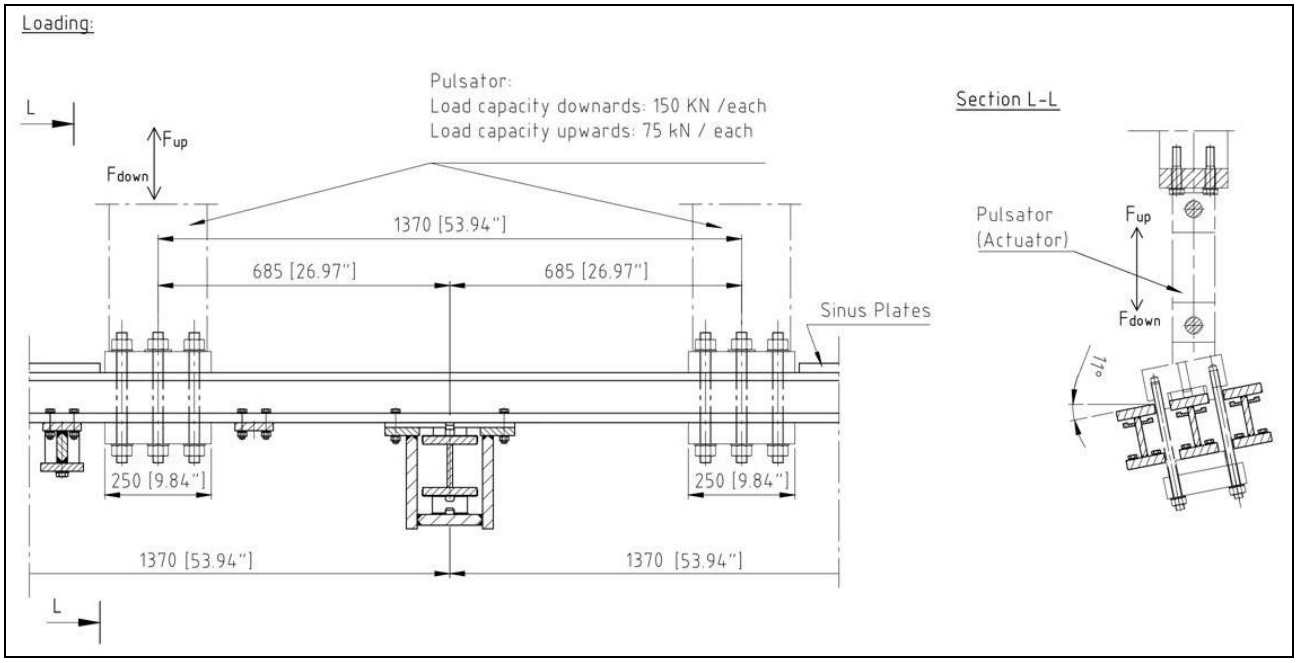

Figure A4: **Fatigue testing** of a full joint section according to AASHTO LRFD Bridge Construction Specifications Appendix A19, consisting of 10 single tests, each with 6 million load cycles verifying infinite fatigue life resistance

APPENDIX 2

Cover sheet of report

Noise reduction measures for Tensa®Modular expansion joints - Presentation of options and evaluation of effectiveness (February 2013)

Noise reduction measures for Tensa®Modular expansion joints

Presentation of options and evaluation of effectiveness

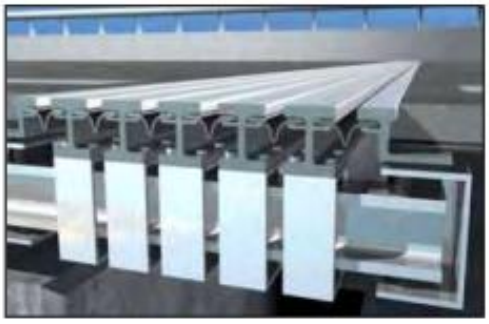

Long version of report

(A short version is also available)

1. Drilling of holes in top flange of surface beams using template

2. Threading of holes

3. Cleaning of expansion joint after drilling and threading of holes

4. Checking of threads

5. Application of anti-slip coating

6. Placing of sinus plates and screwing to beams

7. Verification of screw tightness

8. Final quality check

9. Final quality check

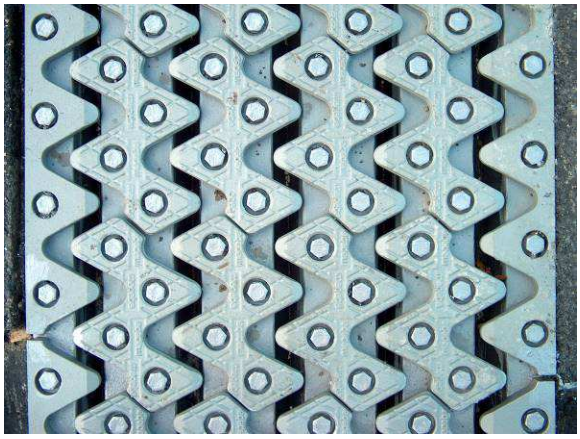

10. Top view of expansion joint equipped with sinus plates

Noise reduction up to 80% towards other expansion joint types

(% reduction in total sound energy)

mageba

Red text added by WSDOT

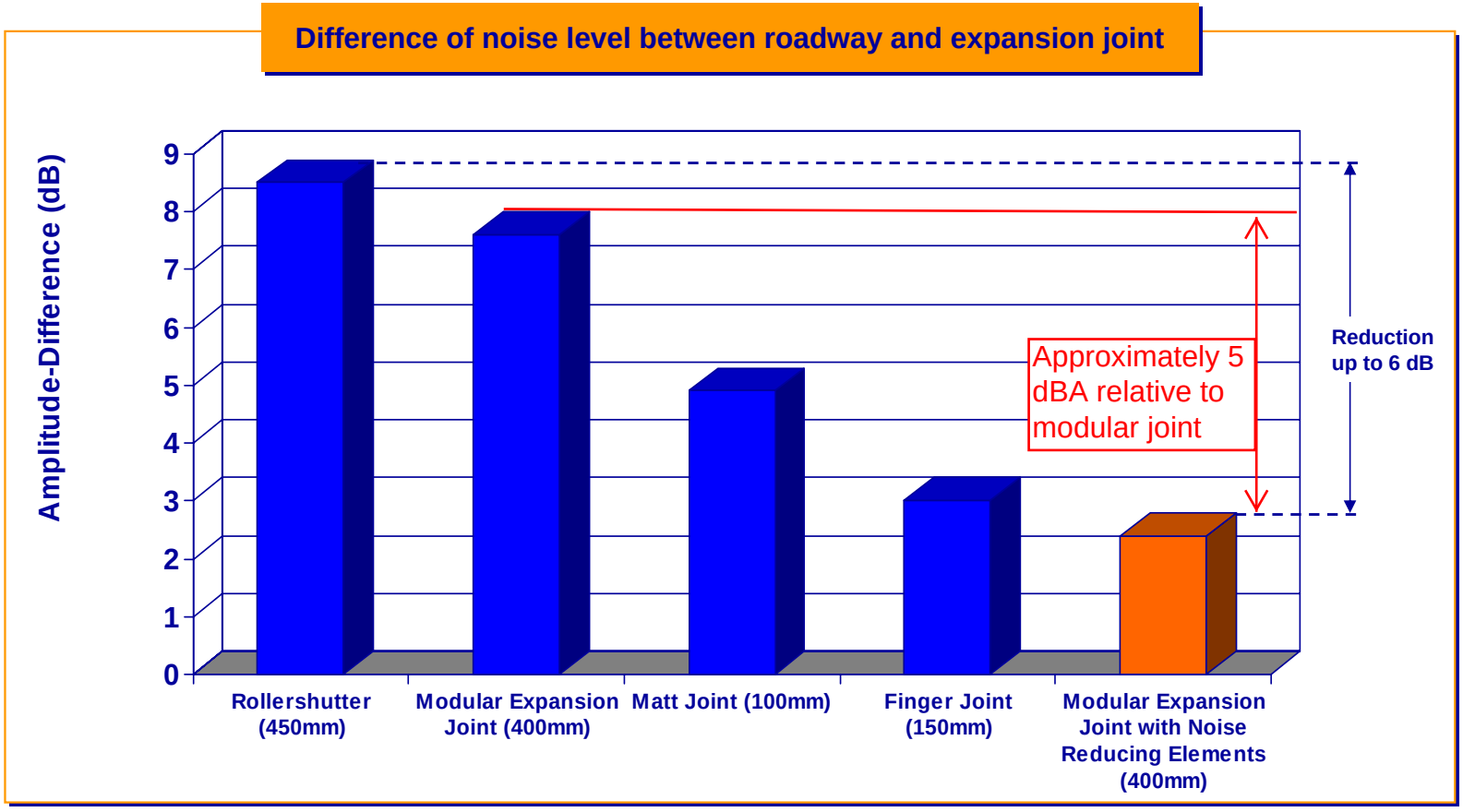

Noise level measurement with traffic at 80 km/h, carried out by independent consultant “Müller-BBM”, February 1999