# Building your own pontoon (ISW)

**Arrival date:** December 5, 2014

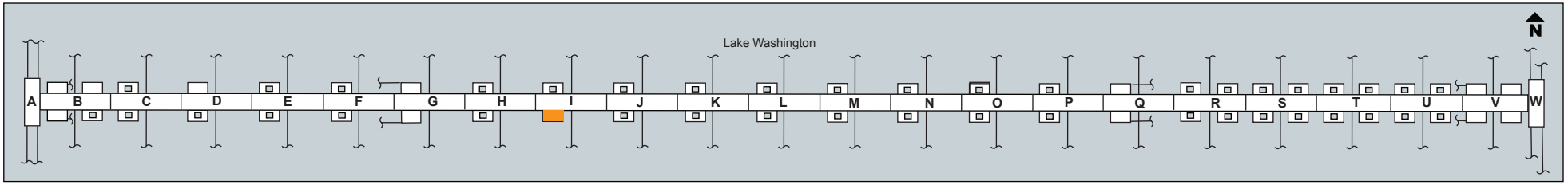


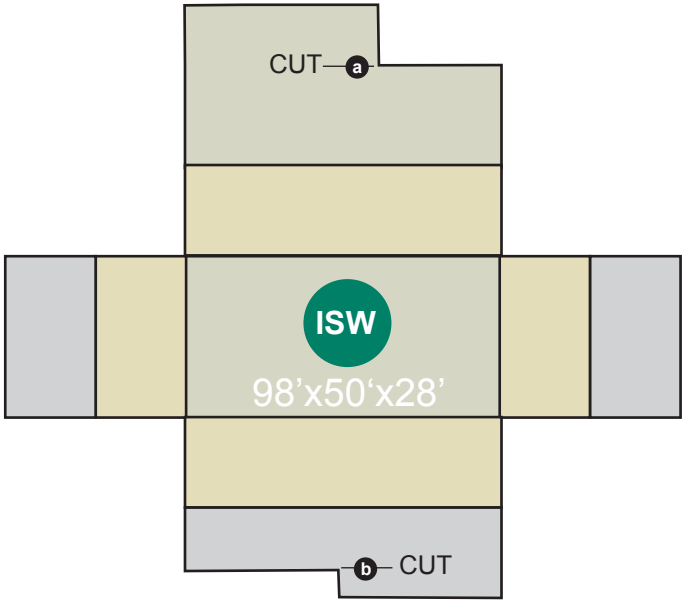


**Instruction:**
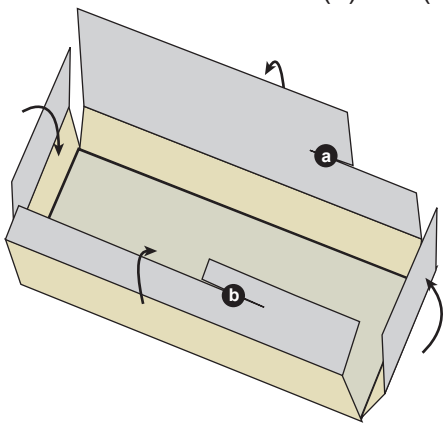
1. Cut around the edge
2. Cut (a) and (b)
3. Fold all flaps in
4. insert (a) into (b)