FOG TITE INCORPORATED

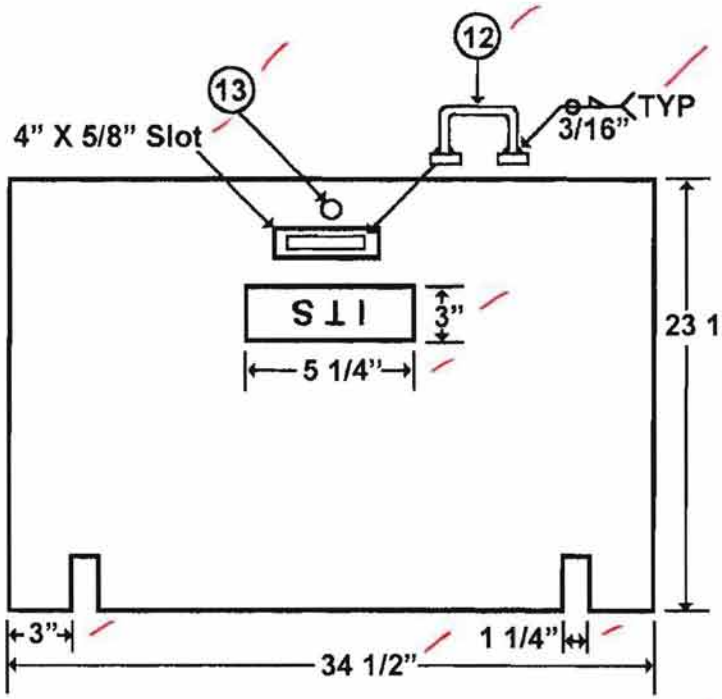

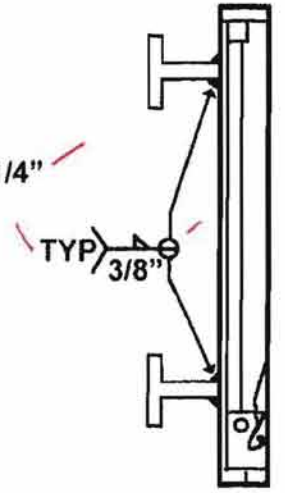

#	QTY	NAME
1	2	¾" x ¾" x 14" Bar
2	2	¾" x ¾" x 21" Bar
3	1	¾" x ¾" x 22 3/8" Bar
4	1	1 ½" x 1 ½" x ¼" Angle
5	2	1 ½" x 1 ½" x ¼" Angle
6	2	5/16" SS Coupling Nut
7	1	¼" x ¾" SS Ground Stud
8	12	3/8" x 3" Studs
9	1	1" x 3 x 1/8" Plate
10	1	4" x 6" x 1/8" Plate
11	1	1 ½" x 1/8" Washer
12	1	½" Lift Handle
13	1	1 ½" x ½" SS Penta Head Bolt
14	1	1 5/8" x 3/4" SS Channel w/ ½" SS nut

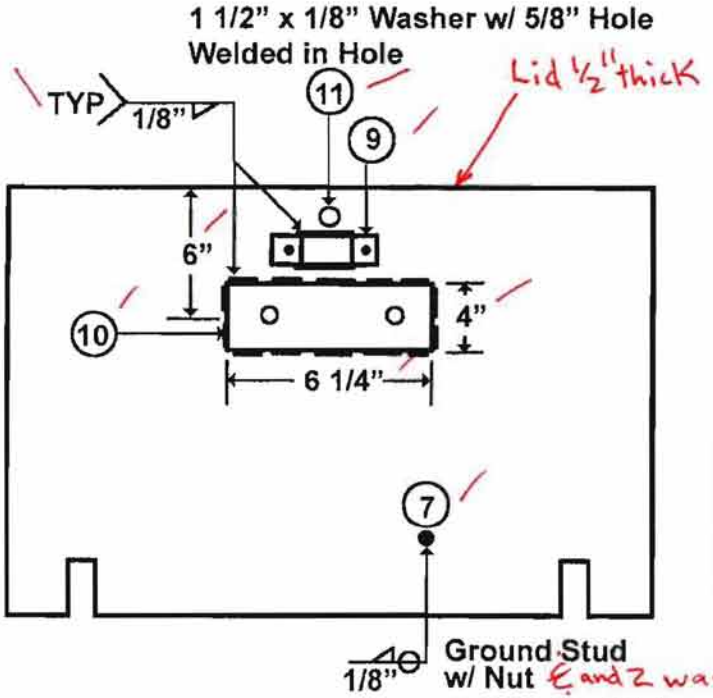

APPROVED AS NOTED
Washington State
Department of Transportation
HQ Traffic Operations Office
DATE December 1, 2009 TAT

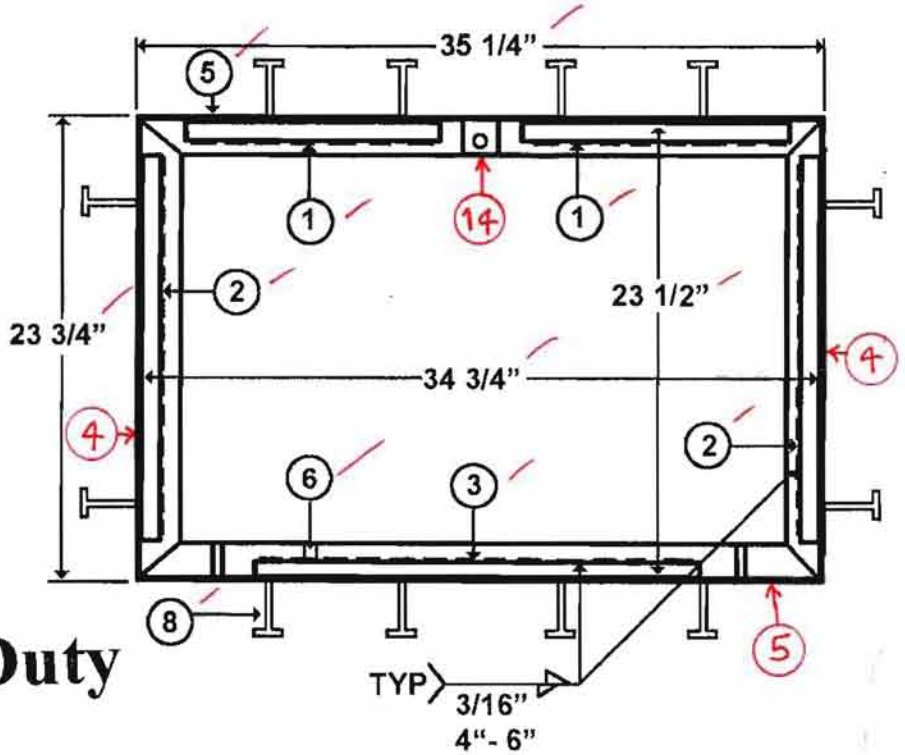

233 Standard Duty

FOGTITE
INCORPORATED

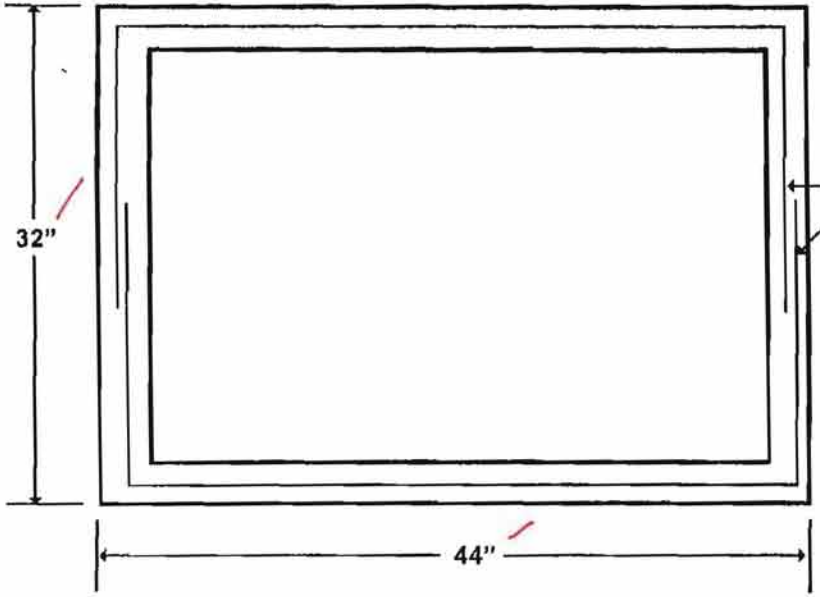

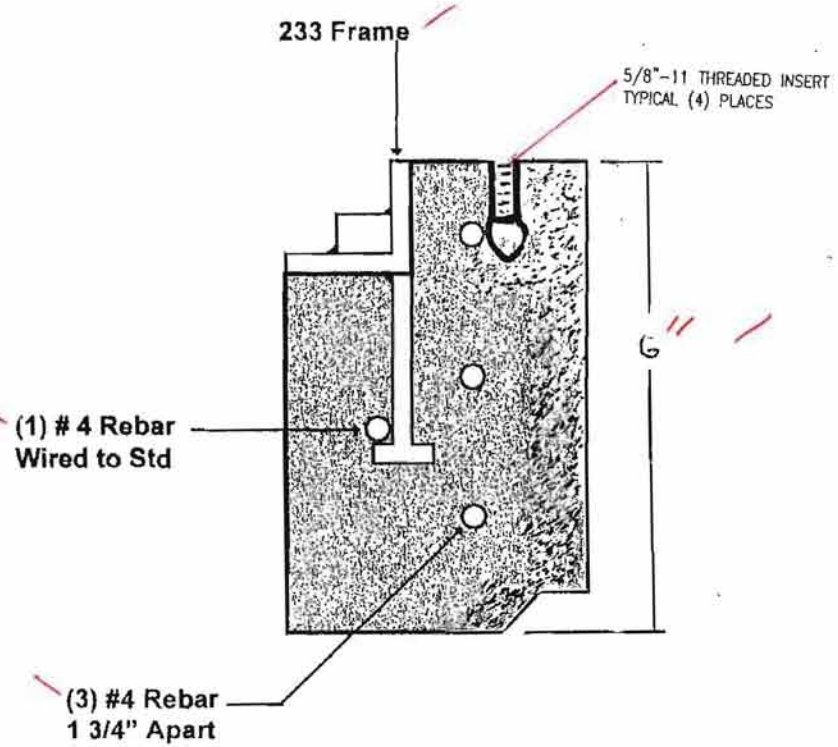

233 Standard Duty

APPROVED
Washington State
Department of Transportation
HQ Traffic Operations Office
DATE December 1, 2009 TAT

see WSDOT Ammendment to Standard Specifications, Dec. 4, 2006 for design requirements & test proceedures. Acceptance of this pull box is based on materials requirements & receipt of independent testing lab results stating pull box meets or exceeds testing criteria.

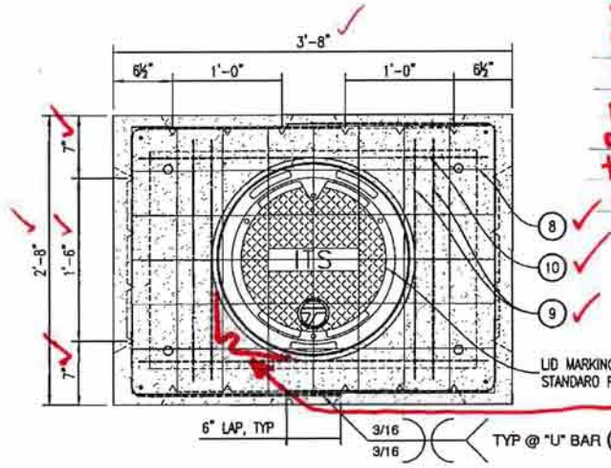

#4 through cored hole in frame 3711ZPT. 12 inch lap & wire tie to #3 bar. Typical 4 places.

TOP VIEW

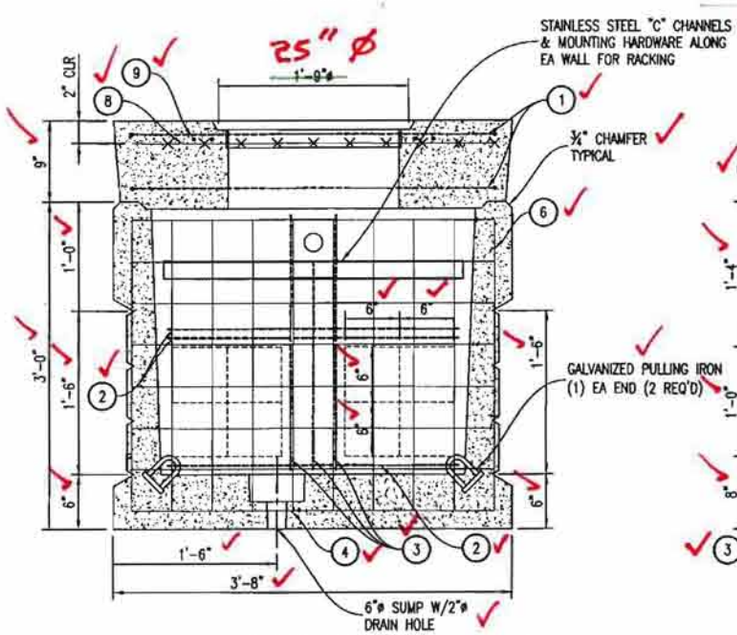

SECTION VIEW

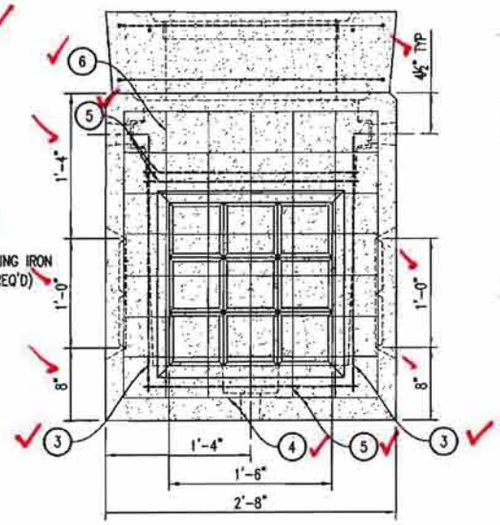

SIDE VIEW

1 / S1 PULL BOX DETAIL
1" = 1'-0"

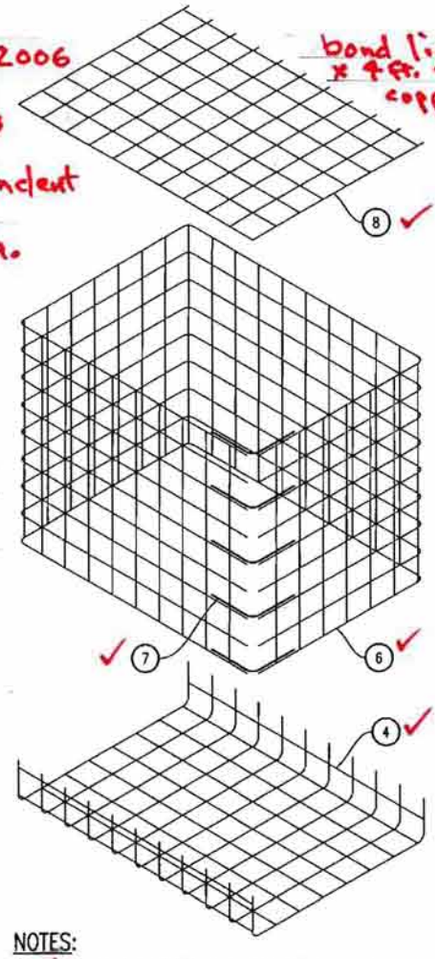

NOTES:

1. SHOP CUT WELDED WIRE MESH FOR BLOCKOUTS. PROVIDE #3 TRIMMING BARS 9 & 10 AROUND BLOCKOUTS AS SHOWN.

2 / S1 STEEL MESH ISOMETRIC
3/4" = 1'-0"

bond lid to frame w/ #8 AWG x 4 ft. tinned, braided copper.

EJIW 3711CPT-D1 Cover - stamped ITS

EJIW 3711ZPT - SLD frame - heavy Duty

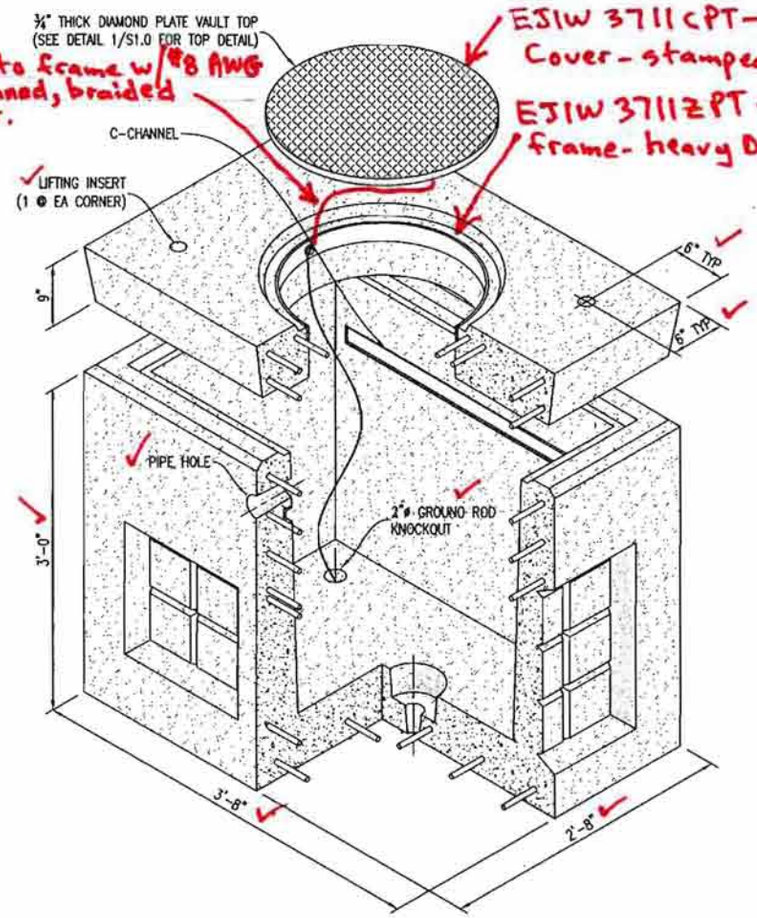

3 / S1 ISOMETRIC ASSEMBLY
1" = 1'-0"

DESIGN PARAMETERS:

- AASHTO STANDARD SPECIFICATIONS FOR HIGHWAY BRIDGES
- ACI-318-02 BUILDING CODE
- ASTM C857 MINIMUM STRUCTURAL DESIGN LOADING FOR UNDERGROUND PRECAST CONCRETE UTILITY STRUCTURES

LOADS:

150 pcf CONCRETE DENSITY
120 pcf SOIL DENSITY
AASHTO H-35-S28 WHEEL LOAD W/30% IMPACT
AASHTO LIVE LOAD SURCHARGE (2' SOIL)
EFFECTIVE SOIL PRESSURE = 45 pcf
NO WATERTABLE

MATERIALS:

CONCRETE - 28 DAY COMPRESSION STRENGTH f'_c = 6000 psi
REBAR - ASTM A706 GRADE 60 fy = 60 ksi (WELDABLE)
ASTM A82/A185 fy = 65 ksi (WELDED WIRE MESH)
THE ROLLS OF WELDED WIRE MESH SHALL BE STRAIGHTENED & CUT TO SIZE BEFORE PLACEMENT.
¾" DIAMOND PLATE COVER - ASTM A36 Fy = 36 ksi

SOIL COVER:

NO SOIL COVER - TOP OF COVER @ GRADE

APPROVED AS NOTED
Washington State
Department of Transportation
HQ Traffic Operations Office
DATE TAT August 7, 2007

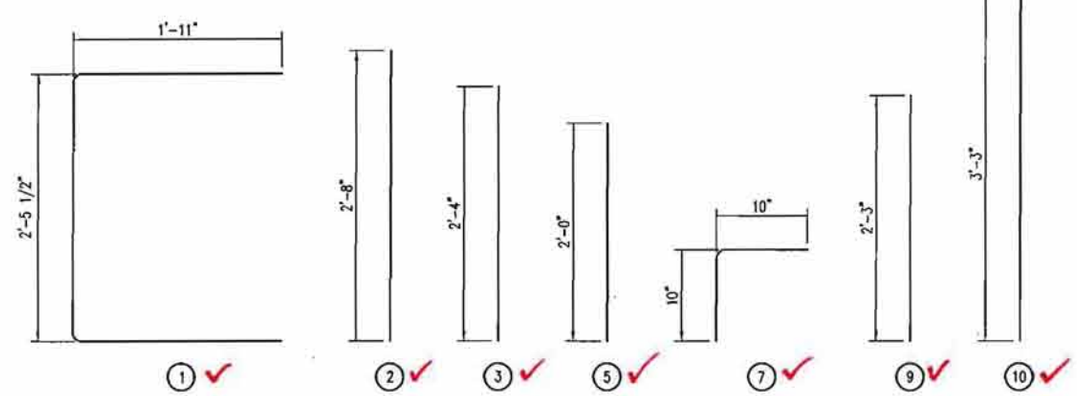

BILL OF MATERIALS (STEEL RE-BAR & WELDED WIRE MESH)

PART	DECRIPTION	QTY	SIZE	WT. LBS
1	#3 ASTM A706 GRADE 60	4	SEE DRAWING	-
2	#3 ASTM A706 GRADE 60	6	STRAIGHT 2'-8"	-
3	#3 ASTM A706 GRADE 60	10	STRAIGHT 2'-4"	-
* 4	4x4 - W4.0xW4.0	1	SEE DETAIL 2/S1.0	-
5	#3 ASTM A706 GRADE 60	6	STRAIGHT 2'-0"	-
6	4x4 - W4.0xW4.0	1	SEE DETAIL 2/S1.0	-
7	#3 ASTM A706 GRADE 60	5	SEE DRAWING	-
8	4x4 - W4.0xW4.0	1	SEE DETAIL 2/S1.0	-
9	#3 ASTM A706 GRADE 60	4	STRAIGHT 2'-3"	-
10	#3 ASTM A706 GRADE 60	2	STRAIGHT 3'-3"	-

* 1'-0" OVERLAP FOR PART 4

EXPIRES 6/23/2008

TYPE 233 PULL BOX (H35)

SCALE:	SEE DETAILS	DWG BY:	KWT
SHEET:	S1.0	CHK BY:	TCL/JBR
JOB NO:	06106	DATE:	05.15.07

FOG TITE INCORPORATED