NOTE

1. SEE "CONSTRUCTION SIGN SPECIFICATION SHEET" OF THE CONTRACT FOR "**H1**", "**H2**", "**H3**", "**H4**", "**X**", AND "**Y**" VALUES AND DEFINITIONS.

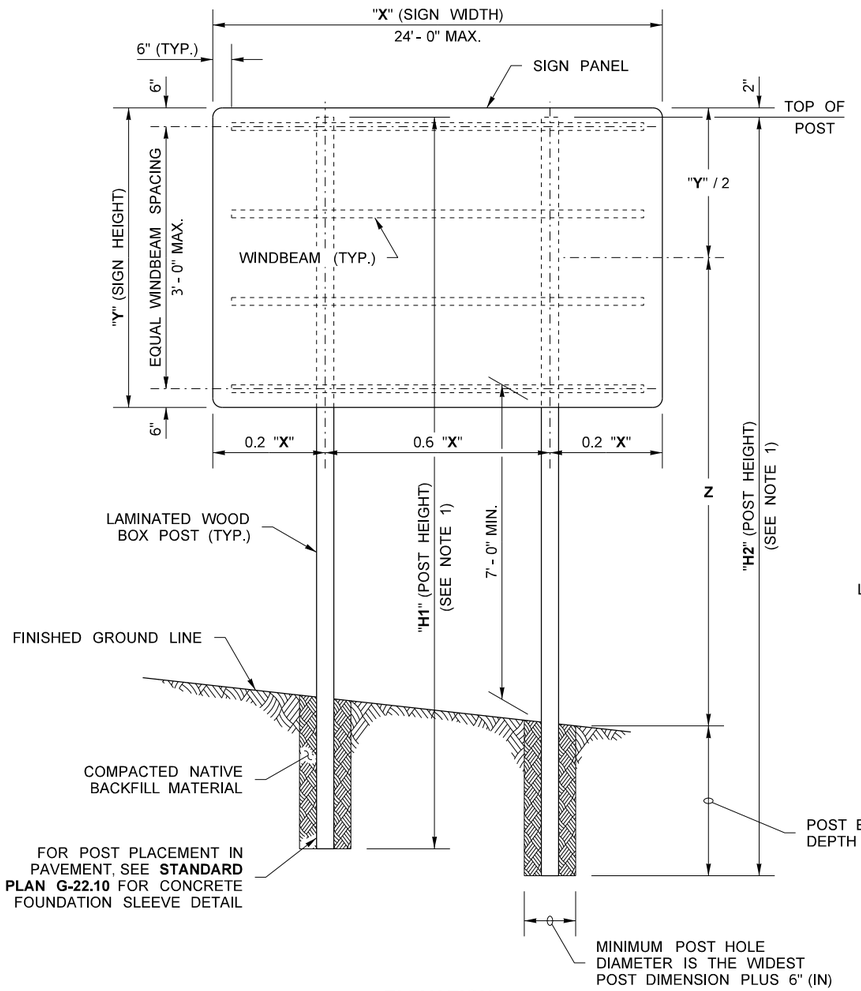

ELEVATION

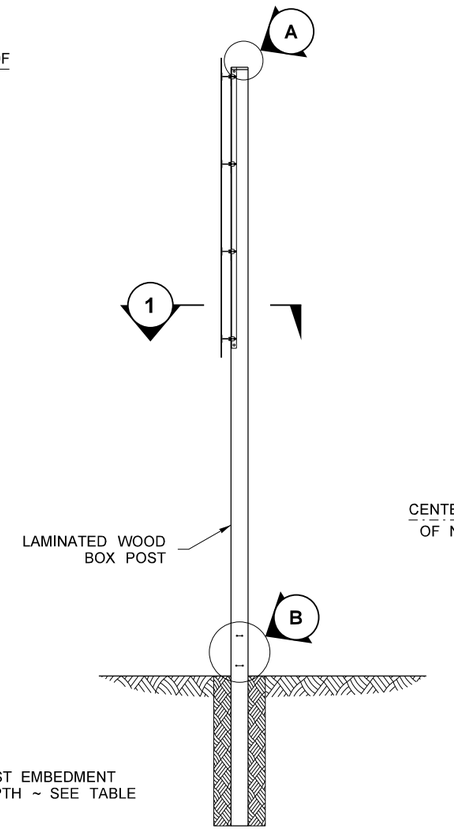

SIDE VIEW

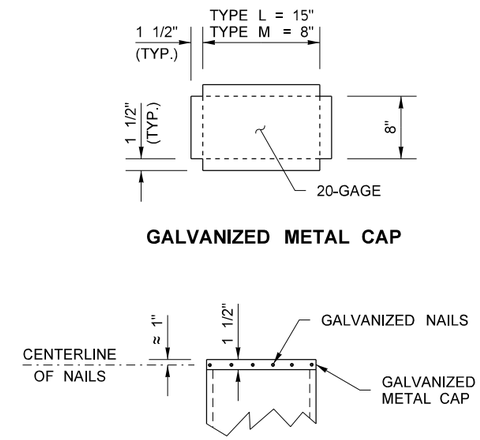

DETAIL A

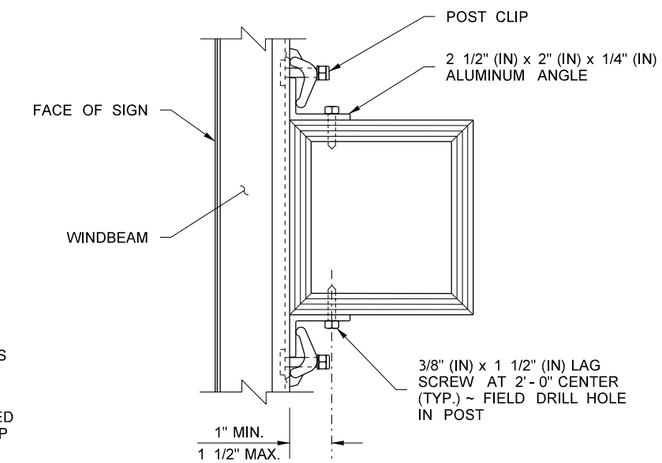

SECTION 1

POST EMBEDMENT DEPTH
DEPTH IN FEET

Z HEIGHT (FT)	TOTAL SIGN AREA (SQUARE FEET)					
	UP TO 50	51 TO 100	101 TO 150	151 TO 200	201 TO 250	251 TO 290
9 TO 12	6	6	7	8	9	10
13 TO 15	6	6	7.5	9	10	
16 TO 18	7	7.5	9			
19 TO 22	7	8	10	NOT PERMITTED		
23 TO 26	7.5	8.5				

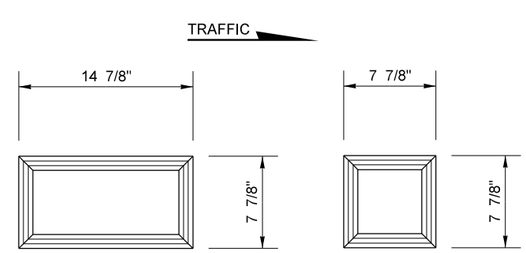

TYPE L POST **TYPE M POST**

TYPICAL SECTIONS

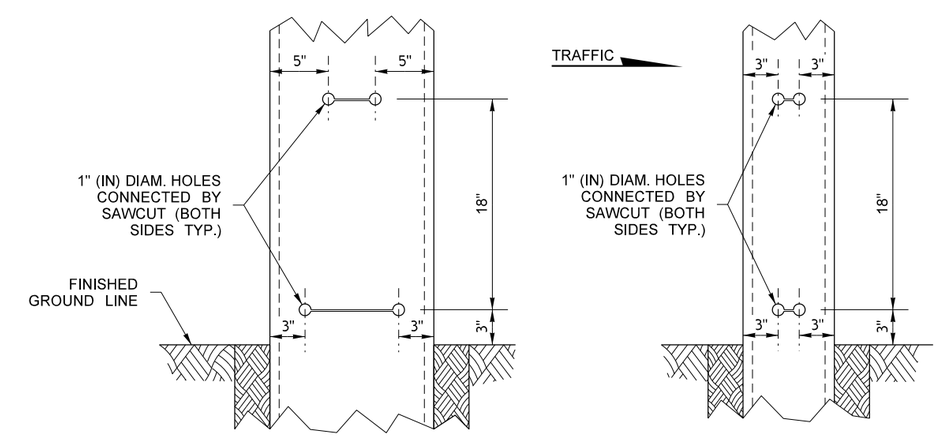

TYPE L POST **TYPE M POST**

BREAKAWAY FEATURE

DETAIL B

FILE NAME	S:\Design R P& S\4-Standards\2-Plan Sheet Library\01-Published PSL\(SD) Signs and Sign Support\W(SD-2) Laminated Wood Sign Post\SD-2.dgn					
TIME	2:02:48 PM					
DATE	10/2/2014					
PLOTTED BY	FletcCo					
DESIGNED BY						
ENTERED BY						
CHECKED BY						
PROJ. ENGR.						
REGIONAL ADM.		REVISION	DATE	BY		

REGION NO. | STATE: WASH | FED.AID PROJ.NO.
JOB NUMBER
CONTRACT NO. | LOCATION NO.

P.E. STAMP BOX — DATE
P.E. STAMP BOX — DATE

Washington State Department of Transportation

LAMINATED WOOD SIGN POST

Plot 1
PLAN REF NO SD-2
SHEET 1 OF 1 SHEETS